Return Address: Verizon Wireless
c/o RealCom Associates
621 SW Alder St., Suite 710
Portland, OR 97205

Skamania County

Community Development Department

Building/Fire Marshal • Environmental Health • Planning

Skamania County Courthouse Annex
Post Office Box 1009
Stevenson, Washington 98648
Phone: 509-427-3900 Inspection Line: 509-427-3922

Unofficial Copy

Administrative Decision

APPLICANT: Verizon Wireless

PROPERTY OWNER: SDS Lumber Co., LLC

FILE NO.: NSA-12-21

PROJECT: To replace three panel antennas and one dish antenna on the existing communications tower located on Underwood Mountain on property owned by SDS Co., LLC.

LOCATION: Underwood Mountain, Underwood; Section 17 of T3N, R10E, W.M., and identified as Skamania County Tax Lot # 03-10-00-0-0-0300-00.

LEGAL: See attached page 7.

ZONING: General Management Area- Commercial Forest (F-1).

DECISION: Based upon the record and the Staff Report, the application Verizon Wireless, described above, **subject to the conditions set forth in this Decision**, is found to be consistent with SCC Title 22 and **is hereby approved**.

Although the proposed development is approved, it may not be buildable due to inadequate soils for septic and/or lack of potable water. These issues are under the jurisdiction of Skamania County's Building Division and the Skamania County Environmental Health Division.

Approval of this request does not exempt the applicant or successors in interest from compliance with all other applicable local, state, and federal laws.

CONDITIONS OF APPROVAL:

The following conditions are required to ensure that the subject request is consistent with Skamania County Code Title 22. **This document, outlining the conditions of approval, must be recorded by the applicant in the deed records of the Skamania County Auditor** in order to ensure notice of the conditions of approval to successors in interest. SCC §22.06.120(C)(2).

1) As per SCC §22.06.120(C)(2), this Administrative Decision **SHALL BE RECORDED** by the applicant in the County deed records prior to commencement of the approved project.

2) All developments shall be consistent with the enclosed site plan, unless modified by the following conditions of approval. If modified, the site plan shall be consistent with the conditions of approval. (See attached)

3) All structures, except fences, including eaves, awnings and overhangs shall meet the following setbacks: **Front yard:** 50 feet from the centerline of the street or road or 20 feet from the front property line, whichever is greater. **Side yard:** 20 feet. **Rear yard:** 20 feet. Setbacks are established from property lines, not fence lines. If any question arises regarding the location of the property lines, the applicant shall be required to hire a professional land surveyor to locate the property lines and mark them with temporary staking prior to a building permit being issued. Staking must remain during construction and all building inspections.

4) The antenna structures shall be painted "haze gray" to match the existing communications tower and antennas.

5) The antenna structures shall be composed of non-reflective materials or materials with low reflectivity.

6) The applicant shall meet all conditions of approval enacted to achieve visual subordinance prior to final inspection by the Community Development Department. The applicant is to coordinate all inspections with the Building Division. A final inspection approval will not be

Unofficial Copy

issued until compliance with all conditions of approval; including visual subordinance criteria have been verified.

7) The Community Development Department will conduct a site visit for Final Inspection to ensure that all conditions of approval have been met. Inspections may take up to four business days from the time of calling for the inspection. Inspections should be arranged by calling the Building Division inspection line at 509-427-3922 or through the permit center public portal at https://co-skamania-wa.smartgovcommunity.com/portal/Public/Welcome .

8) The following procedures shall be effected when cultural resources are discovered during construction activities:

   a) Halt Construction. All construction activities within 100 feet of the discovered cultural resource shall cease. The cultural resources shall remain as found; further disturbance is prohibited.

   b) Notification. The project applicant shall notify the Administrator and the Gorge Commission within twenty-four (24) hours of the discovery. If the cultural resources are prehistoric or otherwise associated with Native Americans, the project applicant shall also notify the Indian tribal governments within twenty-four (24) hours.

   c) Survey and Evaluations. The Gorge Commission shall survey the cultural resources after obtaining written permission from the landowner and appropriate permits from the DAHP. (See Revised Code of Washington 27.53) It shall gather enough information to evaluate the significance of the cultural resources. The survey and evaluation shall be documented in a report that generally follows the provisions in Section 22.22.030 of this Chapter. Based upon the survey and evaluation report and any written comments, the Administrator shall make a final decision on whether the resources are significant. Construction activities may recommence if the cultural resources are not significant.

   d) Mitigation Plan. Mitigation plans shall be prepared according to the information, consultation and report provisions contained in Section 22.22.050 of this Chapter. Construction activities may recommence when conditions in the mitigation plan have been executed.

9) The following procedures shall be effected when human remains are discovered during a cultural resource survey or during construction. Human remains means articulated or disarticulated human skeletal remains, bones or teeth, with or without attendant burial artifacts.

   a) Halt of Activities. All survey, excavation and construction activities shall cease.

Unofficial Copy

b) Notification. Local law enforcement officials, the Administrator, the Gorge Commission, and the Indian tribal governments shall be contacted immediately.

c) Inspection. The county coroner, or appropriate official, shall inspect the remains at the project site and determine if they are prehistoric/ historic or modern. Representatives of the Indian tribal governments shall be contacted immediately and have an opportunity to monitor the inspection.

d) Jurisdiction. If the remains are modern, the appropriate law enforcement official shall assume jurisdiction and the cultural resource protection process may conclude.

e) Treatment. The procedures set out in RCW 27.44 and 68.05 shall generally be implemented if the remains are prehistoric/ historic. If human remains will be reinterred or preserved in their original position, a mitigation plan shall be prepared in accordance with the consultation and report requirements set out in Section 22.22.050 of this Chapter. The mitigation plan shall accommodate the cultural and religious concerns of Native Americans. The cultural resource protection process may conclude when conditions set forth in Section 22.22.050(C) of this Chapter are met and the mitigation plan is executed.

Dated and Signed this 25th day of September, 2012, at Stevenson, Washington.

Jessica Davenport, Planning Manager
Planning Division

NOTES

Any new residential development, related accessory structures such as garages or workshops, fences, and additions or alterations not included in this approved site plan, will require a new application and review.

EXPIRATION

As per SCC §22.06.150(A), this Administrative Decision approving a proposed development action shall become void in two years if the development is not commenced within that period, or once development has commenced the development action is discontinued for any reason for one continuous year or more.

Unofficial Copy

If the development does not include a structure the permit shall expire two years after the date the land use approval was granted unless the use or development was established according to all specifications and conditions of approval in the approval. For land divisions, "established" means the final deed or plat has been recorded with the county auditor.

If the development includes a **structure** the permit shall expire when construction has not commenced within two (2) years of the date the land use approval was granted; or once the structure has been started and if the structure has not been completed within two (2) years of the date of commencement of construction the permit shall expire. Completion of the structure for this purpose means the completion of the exterior surface(s) of the structure; and compliance with all conditions of approval in the land use approval, including, but not limited to, painting of the exterior of the structure.

APPEALS

The Director reserves the right to provide additional comment and findings of fact regarding this decision, if appealed.

This Administrative Decision shall be final unless reversed or modified on appeal. A written Notice of Appeal form must be filed by an interested person within 20 days from the date hereof. Appeals are to be made to the Skamania County Hearing Examiner, P.O. Box 1009, Stevenson, WA 98648. Notice of Appeal forms and mailing lists are available at the Community Development Department and must be accompanied by a $2,450.00 nonrefundable-filing fee and a Certificate of Mailing.

The final determination of the Environmental Threshold Determination related to this underlying government action can be appealed to a court of competent jurisdiction, along with the underlying government action, only by the parties with standing to the Environmental Threshold Determination. If the underlying government action was exempt from SEPA review, this section does not apply.

WARNING

On November 30, 1998 the Columbia River Gorge Commission overturned a Skamania County Director's Decision 18 months after the 20 day appeal period had expired. You are hereby warned that you are proceeding at your own risk and Skamania County will not be liable for any damages you incur in reliance upon your Administrative Decision or any amendments thereto.

A copy of the Decision was sent to the following:

Skamania County Building Division

A copy of this Decision, including the Staff Report, was sent to the following:

Persons submitting written comments in a timely manner

Unofficial Copy

Yakama Indian Nation
Confederated Tribes of the Umatilla Indian Reservation
Confederated Tribes of the Warm Springs (electronic)
Nez Perce Tribe
Cowlitz Tribe
Department of Archaeology and Historic Preservation
Columbia River Gorge Commission (electronic)
U.S. Forest Service - NSA Office (electronic)
Board of County Commissioners (electronic)
State of Washington Department of Commerce – Paul Johnson (electronic)
Department of Fish and Wildlife (electronic)
Washington Natural Heritage Program (electronic)

Unofficial Copy

PARCEL 16: All of Section 17, Township 3 North, Range 10 East of the Willamette Meridian, i the County of Skamania, State of Washington.

EXCEPTING therefrom the following:

A. That portion conveyed to State of Washington by instrument recorded December 12, 1947 under Auditor's File No. 37340.

B. That portion conveyed to Lee Montgomery et. ux. by instrument recorded March 16, 1970 in Book 61, Page 595, Auditor's File No. 71947.

C. That portion conveyed to Karl Klippel et. ux. by instrument recorded August 8, 1995 in Book 151, Page 631.

D The South half of the South half of the Southeast Quarter of the Southeast Quarte as described by instrument recorded in Book 74, Page 802.

Unofficial Copy

UNOFFICIAL COPY

THIS IS NOT A SURVEY

ALL INFORMATION AND TRUE NORTH HAVE BEEN OBTAINED FROM EXISTING DRAWINGS AND ARE APPROXIMATE.

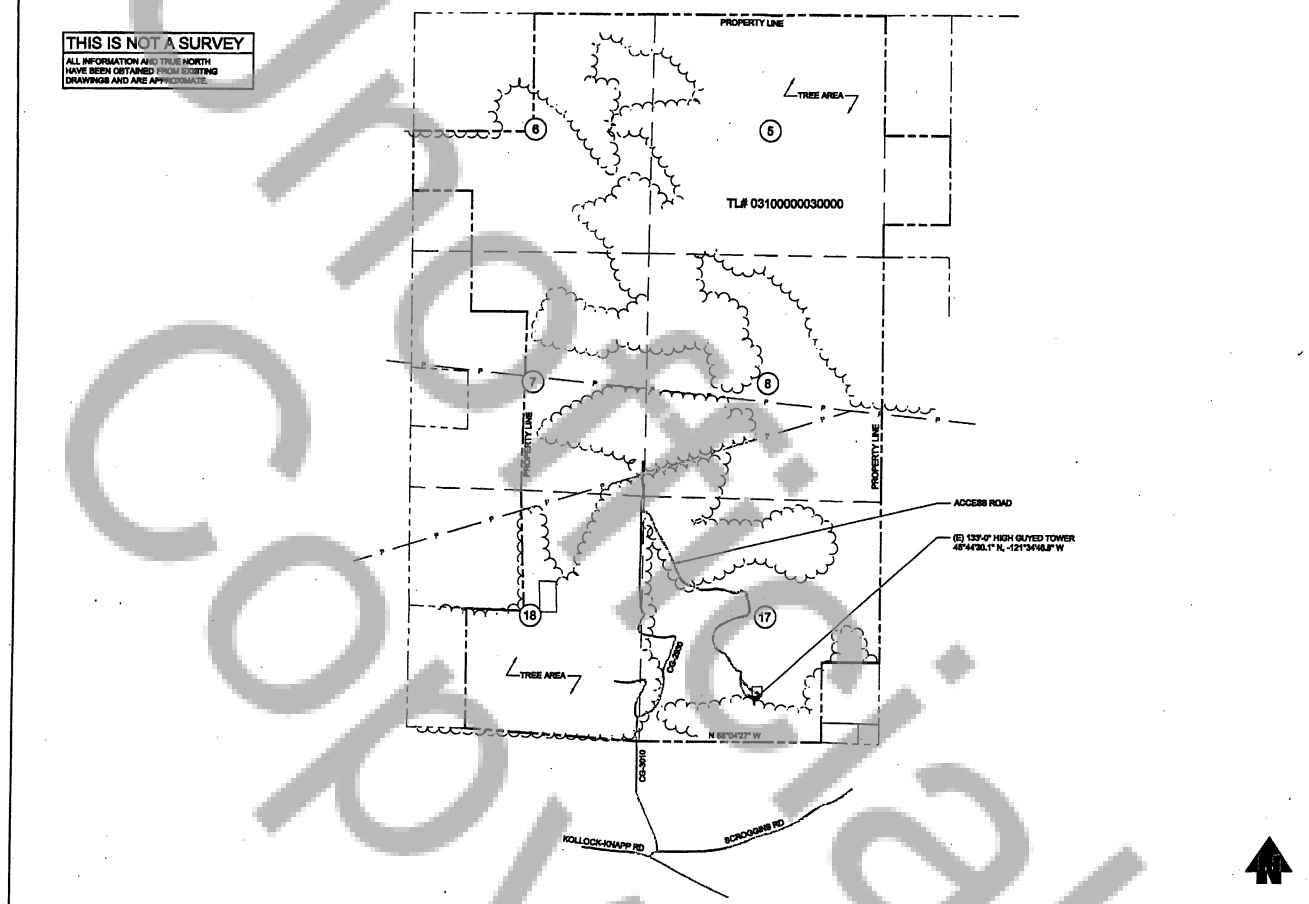

PARCEL PLAN

22x34 SCALE: NTS | 11x17 SCALE: NTS | 1

Redacted

verizon wireless

We never stop working for you.

REALCOM

PLANS PREPARED BY:

CONNECTICUT ENGINEERING, INC.

PROJECT INFO:

PTL DRANO

UNDERWOOD MOUNTAIN
UNDERWOOD, WA 98651
SKAMANIA COUNTY

ISSUED FOR:

CONSTRUCTION

REV:	DATE:	ISSUED FOR:	BY:
1	08-03-12	CONSTRUCTION	JEG
2	06-27-12	CLIENT REVIEW	AJB

DRAWN BY:	CHK.:	APV.:
AJB	MWO	MWO

CURRENT ISSUE DATE:

08-03-12

LICENSURE:

8/3/12

DRAWING INFORMATION:

DO NOT SCALE DRAWINGS. CONTRACTOR MUST VERIFY ALL DIMENSIONS AND ADVISE CONSULTANTS OF ANY ERRORS AND OMISSIONS. ALL PREVIOUS ISSUES OF THIS DRAWING ARE SUPERSEDED BY THE LATEST REVISION. THE INFORMATION CONTAINED IN THIS SET OF DOCUMENTS IS PROPRIETARY BY NATURE. ANY USE OR DISCLOSURE OTHER THAN WHICH IS RELATED TO VWABS CLIENT IS STRICTLY PROHIBITED.

DRAWING TITLE:

PARCEL PLAN

DRAWING NUMBER:

A-1 | 0

CEI JOB NUMBER: 12-080017

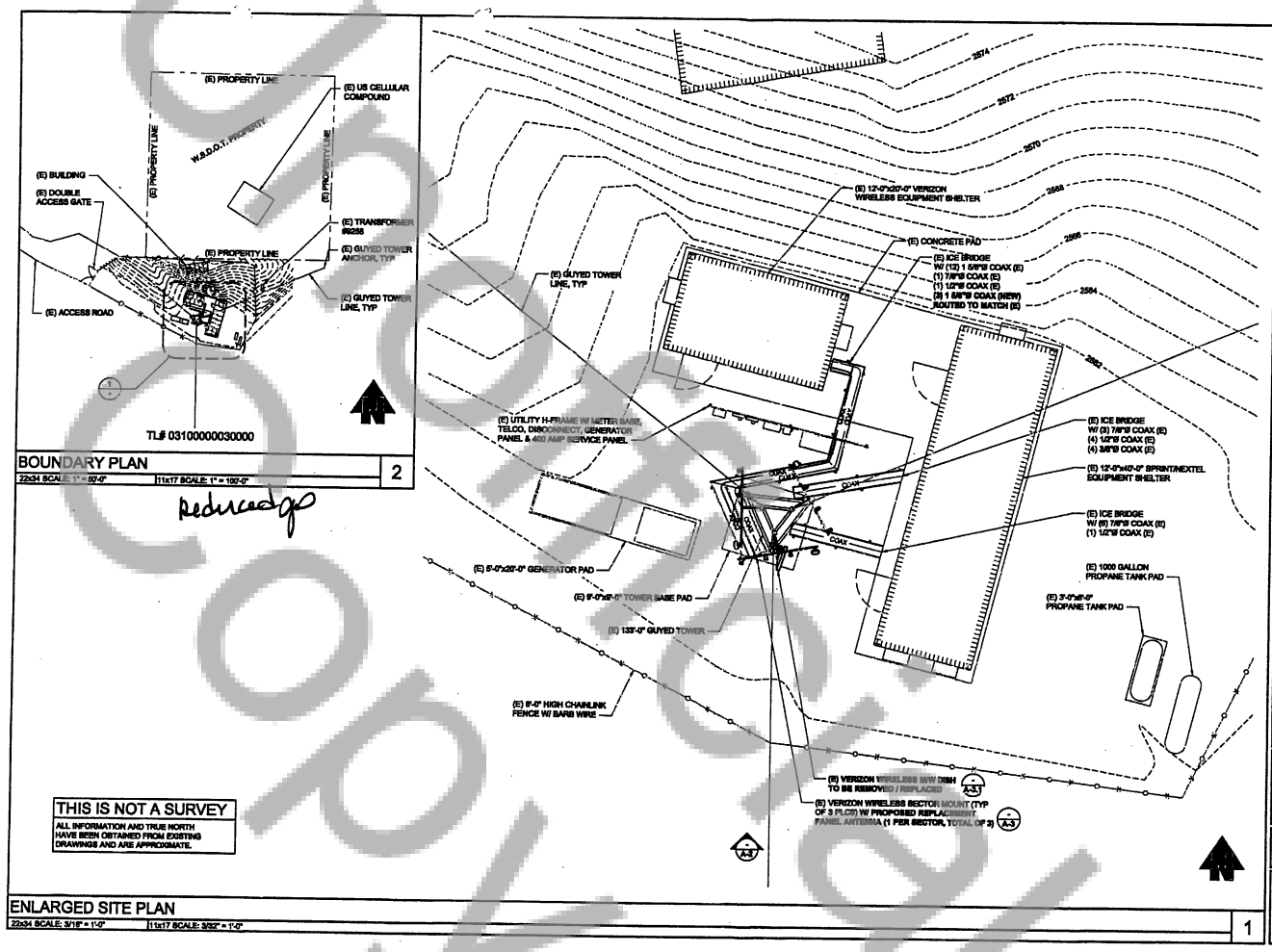

verizon wireless

REALCOM

PLANS PREPARED BY:

CONNECTICUT ENGINEERING, INC.

PROJECT INFO:

PTL DRANO

UNDERWOOD MOUNTAIN
UNDERWOOD, WA 98651
SKAMANIA COUNTY

ISSUED FOR:

CONSTRUCTION

REV:	DATE:	ISSUED FOR:	BY:
B	08-03-12	CONSTRUCTION	JEG
A	06-27-12	CLIENT REVIEW	AJB

DRAWN BY:	CHK.:	APV.:
AJB	MWO	MWO

CURRENT ISSUE DATE:

08-03-12

LICENSURE:

8/3/12

DRAWING INFORMATION:

DO NOT SCALE DRAWINGS. CONTRACTOR MUST VERIFY ALL DIMENSIONS AND ADVISE CONSULTANTS OF ANY DISCREPANCIES OR OMISSIONS. ALL PREVIOUS ISSUE OF THIS DRAWING ARE SUPERSEDED BY THE LATEST REVISION. THE INFORMATION CONTAINED IN THIS SET OF DOCUMENTS IS PROPRIETARY BY NATURE. ANY USE OR DISCLOSURE OTHER THAN THAT AS RELATED TO WHERE CLIENT IS STRICTLY PROHIBITED.

DRAWING TITLE:

ENLARGED SITE & BOUNDARY PLANS

DRAWING NUMBER:

A-1.1 | 0

CEI JOB NUMBER: 12-66017

Unofficial Copy

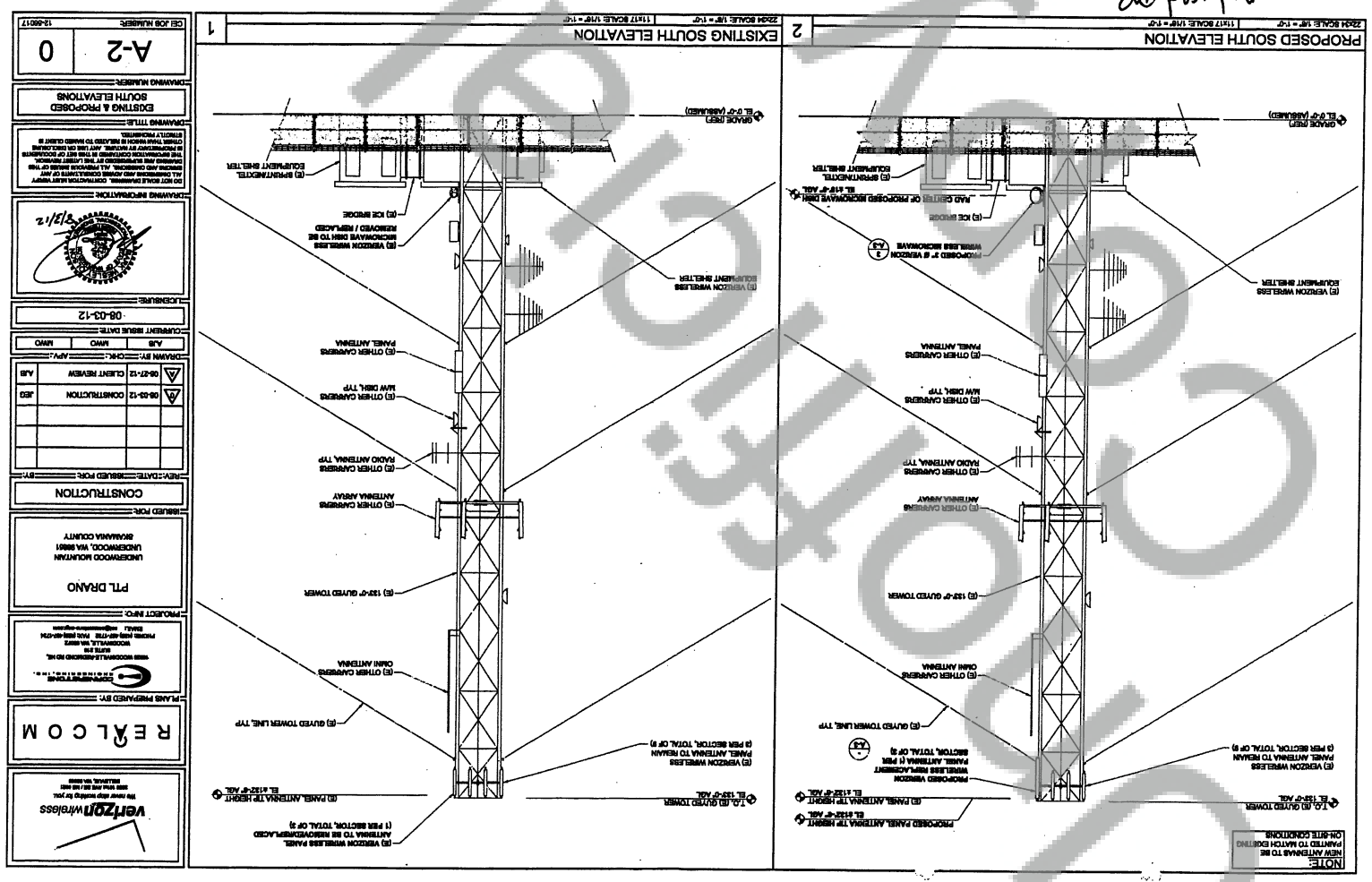

Reduced copy

VERIZON ANTENNA INFORMATION

SECTOR	QTY.	TIP HEIGHT FT. AGL	ANTENNA LENGTH	AZIMUTH	MECHANICAL DOWN TILT	NO. OF COAX RUNS	COAX SIZE	ANTENNA
ALPHA	3	±132'-6"	±8'-0"	80°	3°	3 (E)	1 5/8"	EXISTING
	1	±133'-11"	±7'-11"	80°	4°	1 (E) & (1) NEW	1 5/8" 1 5/8"	SEE A-3 DETAIL 3a
BETA	3	±132'-6"	±8'-0"	178°	6°	3 (E)	1 5/8"	EXISTING
	1	±133'-11"	±7'-11"	178°	6°	1 (E) & (1) NEW	1 5/8" 1 5/8"	SEE A-3 DETAIL 3b
GAMMA	3	±132'-6"	±8'-0"	280°	4°	3 (E)	1 5/8"	EXISTING
	1	±133'-11"	±7'-11"	280°	6°	1 (E) & (1) NEW	1 5/8" 1 5/8"	SEE A-3 DETAIL 3b

COAX LENGTH SCHEDULE

SECTOR	LENGTH	# COAX	DIAMETER
ALPHA	±160'	4 (E) 1 NEW	1 5/8" 1 5/8"
BETA	±160'	4 (E) 1 NEW	1 5/8" 1 5/8"
GAMMA	±160'	4 (E) 1 NEW	1 5/8" 1 5/8"

NOTE:
NEW COAX ROUTING TO MATCH EXISTING COAX ROUTE

ANTENNA AND COAX SCHEDULES 4

22x34 SCALE: NTS | 11x17 SCALE: NTS

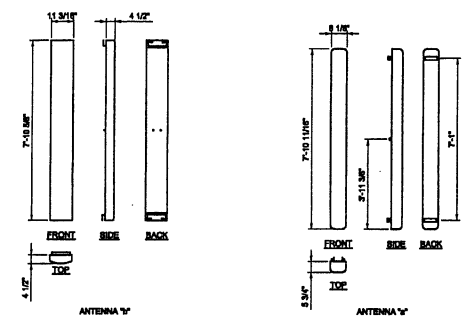

ANTENNA DETAILS 3

22x34 SCALE: 1/2" = 1'-0" | 11x17 SCALE: 1/4" = 1'-0"

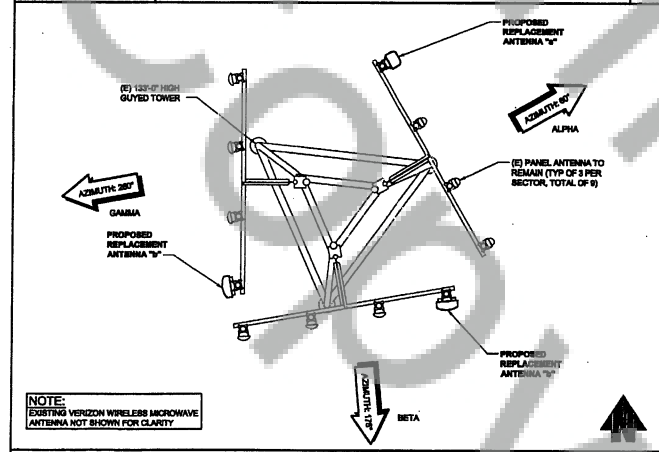

PROPOSED ANTENNA PLAN 2

22x34 SCALE: 1/4" = 1'-0" | 11x17 SCALE: 1/8" = 1'-0"

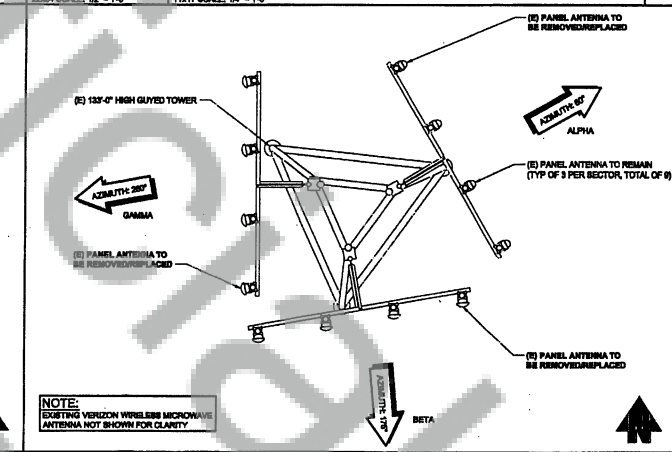

EXISTING ANTENNA PLAN 1

22x34 SCALE: 1/4" = 1'-0" | 11x17 SCALE: 1/8" = 1'-0"

Reduced gp

verizon wireless
We never stop working for you.
9505 NE 4th St
Bellevue, WA 98004

REALCOM

PLANS PREPARED BY:
CORNERSTONE ENGINEERING, INC.
19805 WOODINVILLE-REDMOND RD NE, SUITE 210
WOODINVILLE, WA 98072
PHONE: (425) 485-7750 FAX: (425) 485-7754
EMAIL: info@cornerstone-eng.com

PROJECT INFO:

PTL DRANO

UNDERWOOD MOUNTAIN
UNDERWOOD, WA 98651
SKAMANIA COUNTY

ISSUED FOR:

CONSTRUCTION

REV:	DATE:	ISSUED FOR:	BY:
A	08-03-12	CONSTRUCTION	JSG
A	06-27-12	CLIENT REVIEW	AJB

DRAWN BY:	CHK.:	APV.:
AJB	MWO	MWO

CURRENT ISSUE DATE:
08-03-12

LICENSURE:
8/3/12

DRAWING INFORMATION:
DO NOT SCALE DRAWINGS. CONTRACTOR MUST VERIFY ALL DIMENSIONS AND ADVISE CONSULTANTS OF ANY ERRORS AND OMISSIONS. ALL PROPRIETARY RIGHTS OF THIS DRAWING ARE SUBMITTED TO THE ARCHITECT/ENGINEER. THE INFORMATION CONTAINED IN THIS SET OF DOCUMENTS IS PROPRIETARY BY NATURE. ANY USE OR DISCLOSURE OTHER THAN WHICH IS RELATED TO WHERE CLIENT IS STRICTLY PROHIBITED.

DRAWING TITLE:
ANTENNA PLANS & DETAILS

DRAWING NUMBER:
A-3 | 0

CEI JOB NUMBER: 12-56017

Copy

Unofficial Copy

VERIZON MICROWAVE INFORMATION

SECTOR	QTY.	TIP HEIGHT FT. AGL	ANTENNA LENGTH	AZIMUTH	MECHANICAL DOWN TILT	NO. OF COAX RUNS	COAX SIZE	ANTENNA
SINGEN	1	119'-6"	2' 0	108°	N/A	1 (0)	N/A	SEE A-3 DETAIL 3

MICROWAVE SCHEDULE
22x34 SCALE: NTS 11x17 SCALE: NTS

4

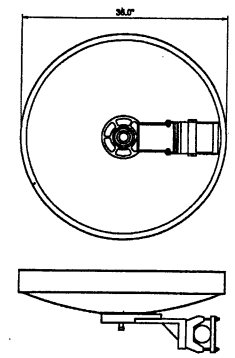

MICROWAVE DISH DETAIL
22x34 SCALE: 3/4" = 1'-0" 11x17 SCALE: 3/8" = 1'-0"

3

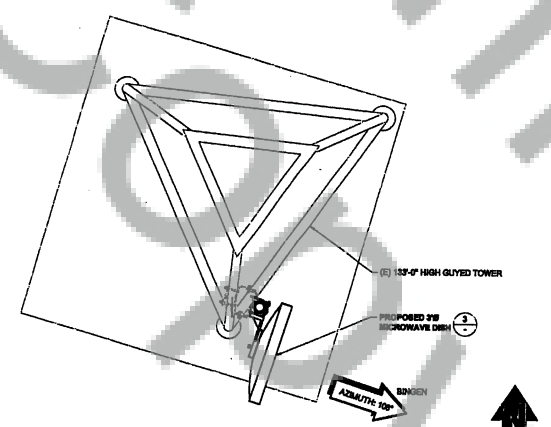

PROPOSED MICROWAVE PLAN
22x34 SCALE: 3/4" = 1'-0" 11x17 SCALE: 3/8" = 1'-0"

2

Reduced gp

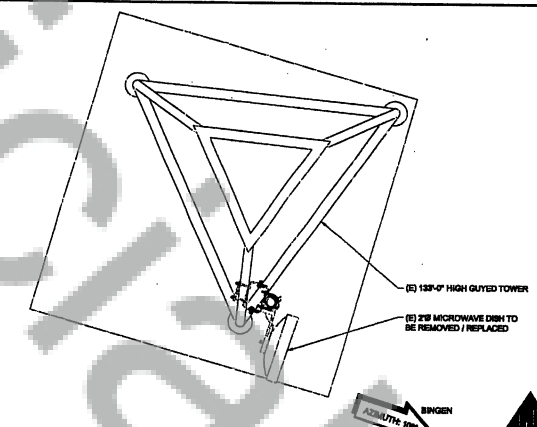

EXISTING MICROWAVE PLAN
22x34 SCALE: 3/4" = 1'-0" 11x17 SCALE: 3/8" = 1'-0"

1

verizon wireless
We never stop working for you
9505 NE 4th St / NE 40th
BELLEVUE, WA 98005

REALCOM

PLANS PREPARED BY:
DOWNING STOWE ENGINEERING, INC.
19933 WOODINVILLE-REDMOND RD NE, SUITE 210
WOODINVILLE, WA 98072
PHONE: (425) 487-1772 FAX: (425) 487-1734
EMAIL: info@downing-stowe.com

PROJECT INFO:

PTL DRANO

UNDERWOOD MOUNTAIN
UNDERWOOD, WA 98651
SKAMANIA COUNTY

ISSUED FOR:

CONSTRUCTION

REV:	DATE:	ISSUED FOR:	BY:
A	08-03-12	CONSTRUCTION	JEG
A	06-27-12	CLIENT REVIEW	AJB

DRAWN BY:	CHK.:	APV.:
AJB	MWO	MWO

CURRENT ISSUE DATE:
08-03-12

LICENSURE:
8/3/12

DRAWING INFORMATION:
DO NOT SCALE DRAWINGS. CONTRACTOR MUST VERIFY ALL DIMENSIONS AND REPORT CONFLICTS OR ANY ERRORS AND OMISSIONS. ALL PREVIOUS ISSUES OF THIS DRAWING ARE SUPERSEDED BY THE LATEST ISSUE. THE INFORMATION CONTAINED IN THIS SET OF DOCUMENTS IS PROPRIETARY BY NATURE. ANY USE OR DISCLOSURE OTHER THAN WHICH IS RELATED TO NAMED CLIENT IS STRICTLY PROHIBITED.

DRAWING TITLE:
EXISTING & PROPOSED MICROWAVE PLANS & DETAILS

DRAWING NUMBER:
A-3.1 0

CB JOB NUMBER: 12-88017

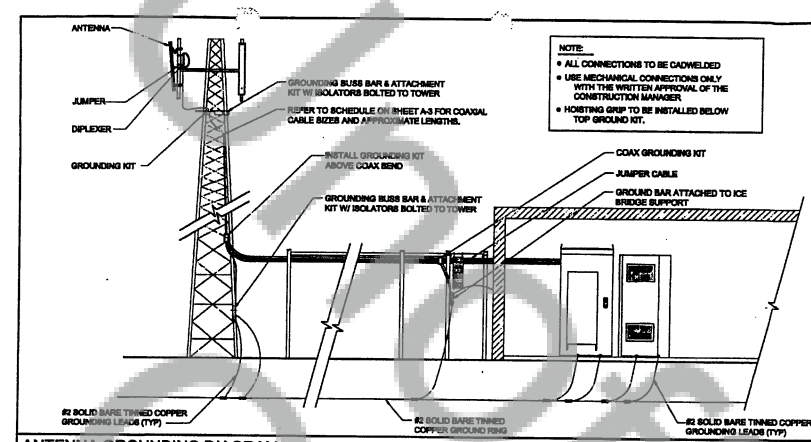

NOTE:
- ALL CONNECTIONS TO BE CADWELDED
- USE MECHANICAL CONNECTIONS ONLY WITH THE WRITTEN APPROVAL OF THE CONSTRUCTION MANAGER
- HOISTING GRIP TO BE INSTALLED BELOW TOP GROUND KIT.

ANTENNA GROUNDING DIAGRAM
22x34 SCALE: NTS 11x17 SCALE: NTS

4 NOT USED
22x34 SCALE: NTS 11x17 SCALE: NTS

3 NOT USED
22x34 SCALE: NTS 11x17 SCALE: NTS

2 NOT USED
22x34 SCALE: NTS 11x17 SCALE: NTS

1 NOT USED
22x34 SCALE: NTS 11x17 SCALE: NTS

Reduced gps

verizon wireless
We never stop working for you.
9505 191st Ave SE / MS 8001
Issaquah, WA 98027

REALCOM

PLANS PREPARED BY:
CORNERSTONE ENGINEERING, INC.
19805 WOODINVILLE-REDMOND RD NE, SUITE 210
WOODINVILLE, WA 98072
PHONE: (425) 485-1758 FAX: (425) 487-0784
EMAIL: info@cornerstone-engineers

PROJECT INFO:
PTL DRANO
UNDERWOOD MOUNTAIN
UNDERWOOD, WA 98651
SKAMANIA COUNTY

ISSUED FOR: CONSTRUCTION

REV:	DATE:	ISSUED FOR:	BY:
A	08-03-12	CONSTRUCTION	JEG
A	08-27-12	CLIENT REVIEW	AJB

DRAWN BY: AJB CHK.: MWO APV.: MWO

CURRENT ISSUE DATE: 08-03-12

LICENSURE:
8/31/12

DRAWING INFORMATION:
DO NOT SCALE DRAWINGS. CONTRACTOR MUST VERIFY ALL DIMENSIONS AND ADVISE CONSULTANTS OF ANY ERRORS AND OMISSIONS. ALL PREVIOUS ISSUES OF THIS DRAWING ARE SUPERSEDED BY THE LATEST REVISION. THE INFORMATION CONTAINED IN THIS SET OF DOCUMENTS IS PROPRIETARY BY NATURE. ANY USE OR DISCLOSURE OTHER THAN WHICH IS RELATED TO INARID CLIENT IS STRICTLY PROHIBITED.

DRAWING TITLE: ELECTRICAL GROUNDING

DRAWING NUMBER: E-1 0

CEI JOB NUMBER: 12-88017

Unofficial Copy